COMBINED
10”PLANER & THICKNESSER

Model No. C2-260S(ML392SN)

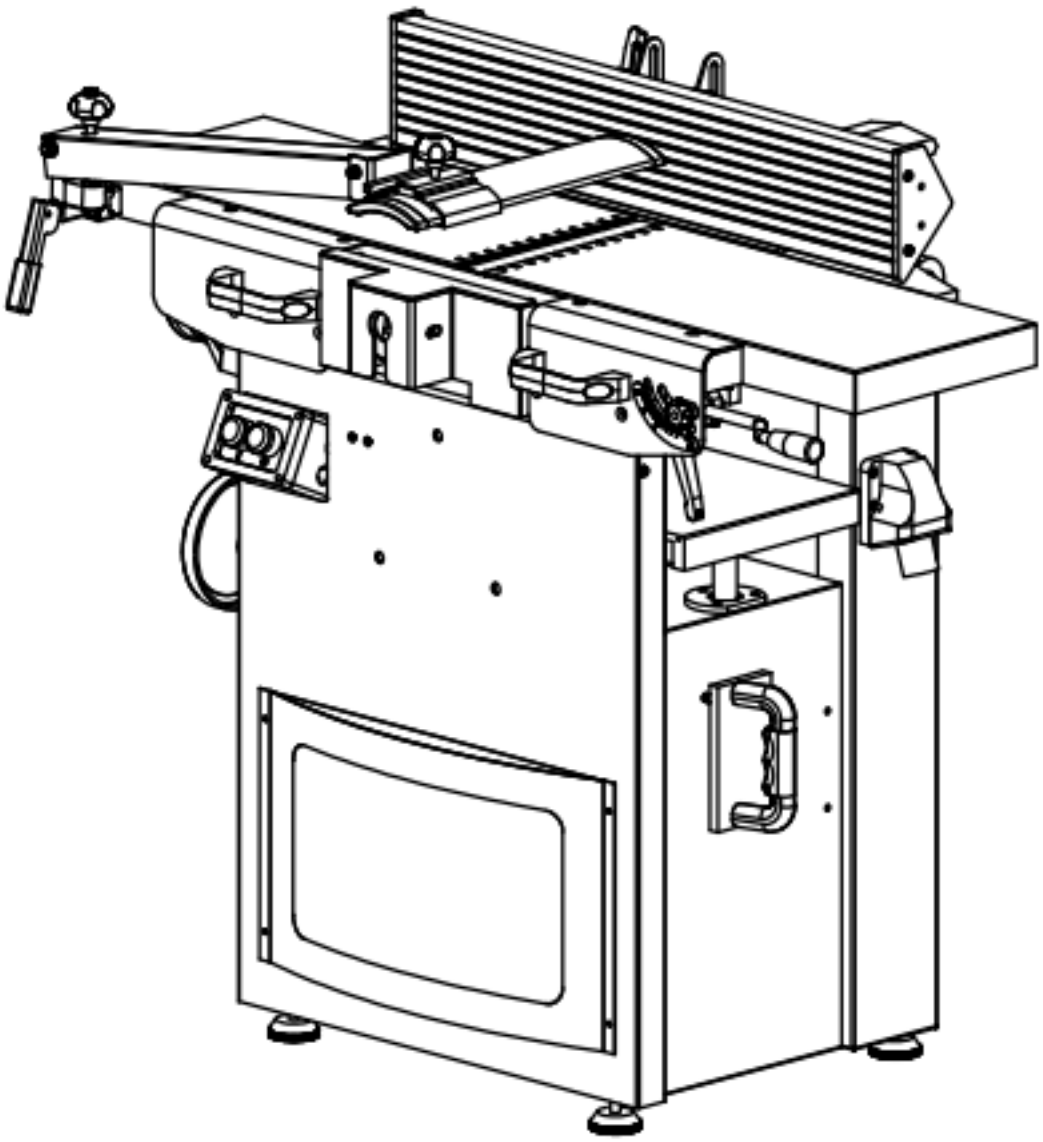

INSTRUCTION MANUAL

Carefully read this instruction manual before operating machine.

INDEX OF CONTENTS

TABLE OF CONTENTS	PAGE 1
GERNERAL SAFETY RULES	PAGE 1-3
RECOMMENDATIONS	PAGE 3
RECEPTION HANDLING	PAGE 3-4
TRANSPORT AND STOCKING	PAGE 4
PLACING THE MACHINE ON THE FLOOR	PAGE 4
INSTALLATIONG	PAGE 4
PREPERATION OF THE MACHINE	PAGE 5
WORKING CONTITIONS	PAGE 5
ELECTRICAL CONNECTION	PAGE 5
GENERAL INFORMATION	PAGE 6
TECHNICAL DATA	PAGE 7
NOISE LEVELS	PAGE 7
EXHAUSTING SYSTEM	PAGE 8
THE ELETRICAL DIAGRAM	PAGE 8
WORKING OPERATIONS	PAGE 9
ADJUSTMENT OF THICKNESSER	PAGE 11
TOOLS	PAGE 12
MAINTENANCE	PAGE 13
REPAIRS	PAGE 14
PARTS DIAGRAM	PAGE 15
PARTS LIST	PAGE 18

GENERAL SAFETY RULES

NOTE: Read all these instructions before attempting to operate this product. Save these instructions for future reference.

1. Keep work areas clear. Cluttered areas and benches invite injuries.
2. Consider work area environment. Do not expose tools to rain. Do not use tools in damp or wet locations. Keep work areas well lit. Do not use tools in the presence of flammable liquids or greases.
3. Guard against electric shock. Avoid body contact with earthed or grounded surfaces.
4. Keep other people away. Do not let other persons, especially children, not involved in the work touch of the tool or the extension lead and keep them away from the work area.
5. Store idle tools. When not in use, tools should be stored in a dry locked-up place, out of reach of children.
6. Do not force the tool. It will do the job better and safer at the rate for which it was intended.
7. Use the right tool. Do not force small tools to do the job of a heavy-duty tool. Do not use tools for purposes not intended, for example, do not use circular saws to cut tree limbs or logs.
8. Dress properly. Do not wear loose clothing or jewelry; they can be caught in moving parts. Non-skid footwear is recommended when working outdoors. Wear protective hair covering to contain long hair.
9. Use protective equipment. Use safety glasses. Use face or dust mask if cutting operations create dust.

10. Connect dust extraction equipment. If devices are provided for the connection of dust extraction and collection equipment, ensure these are connected and properly used.
11. Do not abuse the cable. Never pull the power cable to disconnect it from the socket. Keep the cable from the socket. Keep the cable away from heat, oil and sharp edge.
12. Secure work. If possible use clamps or a vice to hold the work. It is safer than using your hand.
13. Do not over reach. Keep proper footing and balance at all times.
14. Maintain tools with care. Keep cutting tools sharp and clean for better and safer performance. Follow instructions for lubricating and changing accessories. Inspect power cables periodically and if damaged have them replaced by an authorized service facility. Inspect extension cables periodically and replace if damaged. Keep handles dry, clean and free from oil and grease.
15. Disconnect tools. When not in use, before servicing and when changing accessories such as blades, bits, cutters, disconnect tools from the power supply.
16. Remove adjusting keys and wrenches. Form the habit of checking to see that keys and adjusting wrenches are removed from the tool before turning it on.
17. Avoid unintentional starting. Ensure switch is in “OFF” position when plugging in.
18. Use outdoor extension leads intended for outdoor use and so marked.
19. Stay alert. Watch what you are doing, use common sense and do not operate the tool when you are tired.
20. Check damaged parts. Before further use of the tools, it should be carefully checked to determine that it operates properly and perform its intended functions. Check the alignment of moving parts, binding of moving parts, breakage of parts, mounting and any other conditions that may affect its operation. A guard or other part that is damaged should be properly repaired or replaced by an authorized service center unless otherwise indicated in this instruction manual. Do not use the tool if the switch does not turn on and off.
21. Warning! The use of any accessory or attachment other than one recommended in this instruction manual may present a risk of personal injury.
Have your tool repaired by a qualified person. This electric tool complies with the relevant safety rules. Repairs should only be carried out by qualified technicians by using original spare parts, otherwise this may result in considerable danger to the user.
22. Have your tool repaired by a qualified person. This electric tool complies with the relevant safety rules. Repairs should only be carried out by qualified technicians using original spare parts, otherwise it may result in danger to the operator.
23. Never use the machine if the appropriate guard is not in place and correctly adjusted.
24. Do not use knives that are blunt as this increases the danger of kickback of workpieces.
25. Any portion of the cutterblock not being used for planing shall be guarded.
26. When planing narrow short workpieces, a push stick should be used.
27. When planing narrow workpieces, additional measures, such as the use of horizontal pressure devices and spring-loaded guards, may be necessary to ensure safe working.
28. Do not use the machine to cut rebate.
29. Before starting the machine carefully read the instruction manual to avoid any risks of personal injury.
30. The effectiveness of the device for the prevention of kickback and the feed roller should be regularly inspected to ensure safe operation.
31. Tool equipped with chip collection and extraction hoods shall be connected to the dust-and-collecting device.

RECOMMENDATIONS

No one must work on a wood machine without first receiving sufficient training concerning the type of work and without being informed of the risks, the precautions to observe and operating instructions for the guards and compulsory safety devices.
This machine is designed for wood derivatives. It should not be used for other materials.

- Before use we recommend that you carefully read through this manual and that you respect all instructions contained in it in order to achieve the best results from your machine and to work in complete safety.
- In order to ensure that all safety measures taken into consideration during the design of this machine are met any modification of the machine by the user is forbidden.
- Connection to a sawdust or chipping suction aspirator is obligatory to satisfy all the hygiene/safety conditions and to ensure the correct operation of this machine.
- You are strongly recommended to wear protective glasses while using this machine.
- Residual risk
  As with all wood-working machines with manual adjusting, there is always a risk, even when guards are in place and correctly adjusted, of getting close to tools at a working height which corresponds to the thickness of the wood.
  It is essential, therefore, that hands are kept well away from the dangerous areas and that the end of pass thruster is used.

RECEPTION HANDLING

The machine is delivered fully assembled. When handling with the machine use the certified lifting equipment and safe instruments. The best handling can be done with transport pallet and high lift truck. For lifting the operator can use steel wire rope seal with min diameter 5mm.
Before placing the machine on working place, the operator has to consider how large pieces of material, which can be cut in the given room.

Safe work with the machine requires enough space around the machine. When you are sure that the placing responds with your idea, flush the machine with max clearance 1mm/1000mm and screw it on the floor. In any cases the operator has to level (flush) the machine in the right way by help of four adjusting screws (placed in adjustable legs). Do not assemble parts (which were disassembled) before the operator has read the whole instruction manuals and has known the machine well.
Put the lengthwise rule on the guide way and adjust the length stop and secure. Clamp the sliding table on the bars (guide way) or the support of the run-out arm and secure with the small hand crank. Put the angular rule on the sliding table and secure.
Enclosed the operator will find the instruction manual and wrenches necessary.
Check the condition of the machine and the number of packages mentioned on the delivery note. If necessary, make the usual reverse to the carrier.

WARNING! If reverse are made they must be made on receipt of the goods. Late claims will not be considered.

For delivery, the machine is mounted on the wooden crate with wood blocking on the bottom of the crate.

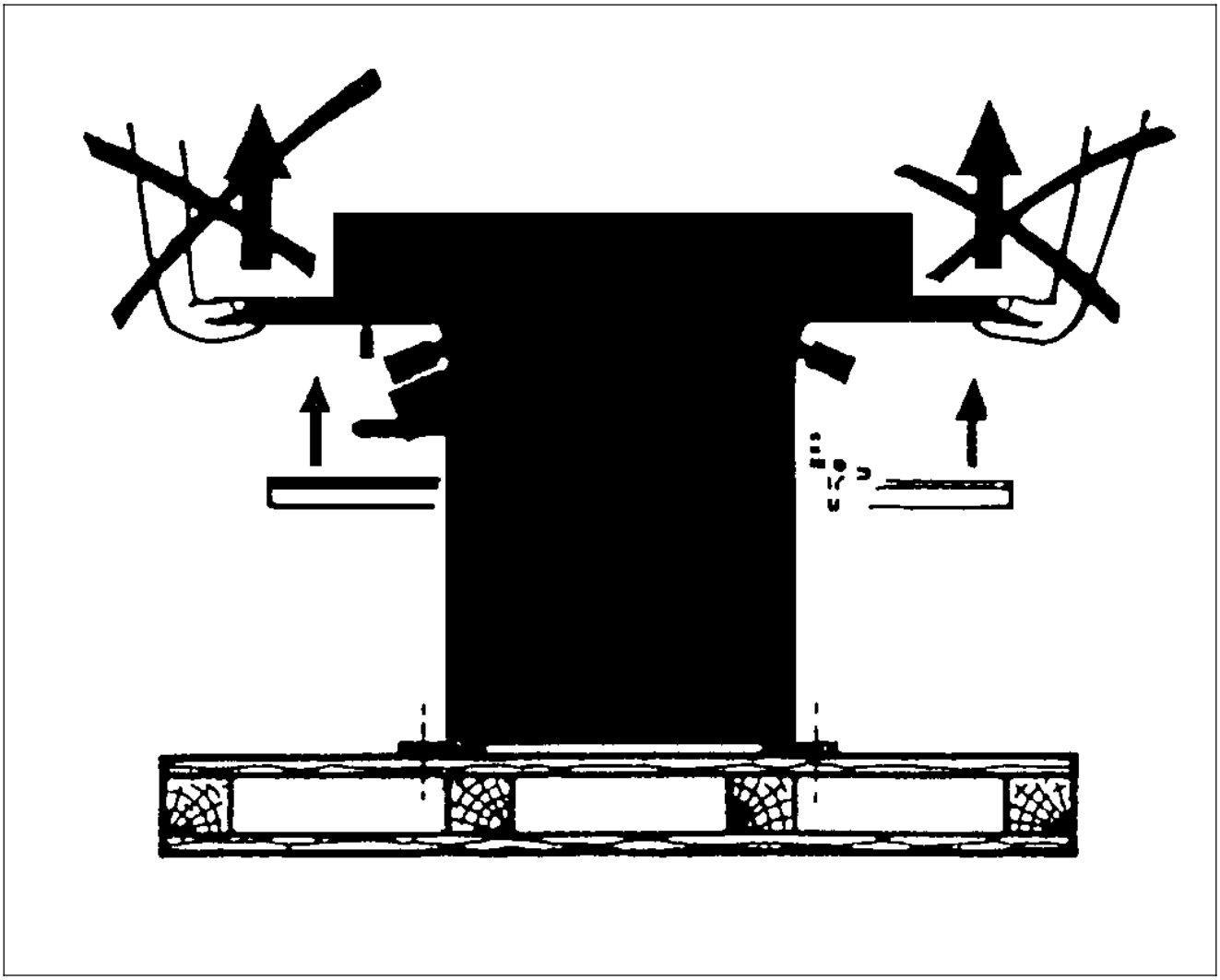

TRANSPORT AND STOCKING

During the transport and stocking it is necessary to protect the machine from excessive vibrations and excessive humidity. The machine can be stocked under the roof with air temperature from -25^0C to 55^0C.

PLACING THE MACHINE ON THE FLOOR

Remove the metal sheet clamping.
Remove the attachments fixing the machine to the crate (screws and bolts)
Clear a sufficient large area round the machine.
Raise the machine slightly and fit two planks under the feet. Use planks which are long enough to act as ramps down to the floor. Pull the machine making sure that it stays on the planks. Once the machine is clear of the crate it will tip.

INSTALLATION

To guarantee corrected alignment of the working surfaces and prepare a stable, level, concrete floor.
WARNING! When handling, take care to avoid shocks or large forces which could cause damage or put the machine out of adjustment.

PREPARATION OF THE MACHINE

The machine unpainted parts are protected with a factory-applied ultra-fine oily film. It is not necessary to remove it before using the machine. However, if you wish you can remove it, use a cloth soaked spirit. Wipe and clean and then apply a sliding agent (Sliber-gleit, Molycote, etc.).

WORKING CONDITIONS

The machine is intended for work under the roof if the following conditions are fulfilled.
Air temperature: from 5^0C to 40^0C, relative humidity: from 30% to 95% non-condensing, altitude above sea level: max 1000m.
The machine must be used as a stationary tool.

ELECTRICAL CONNECTION

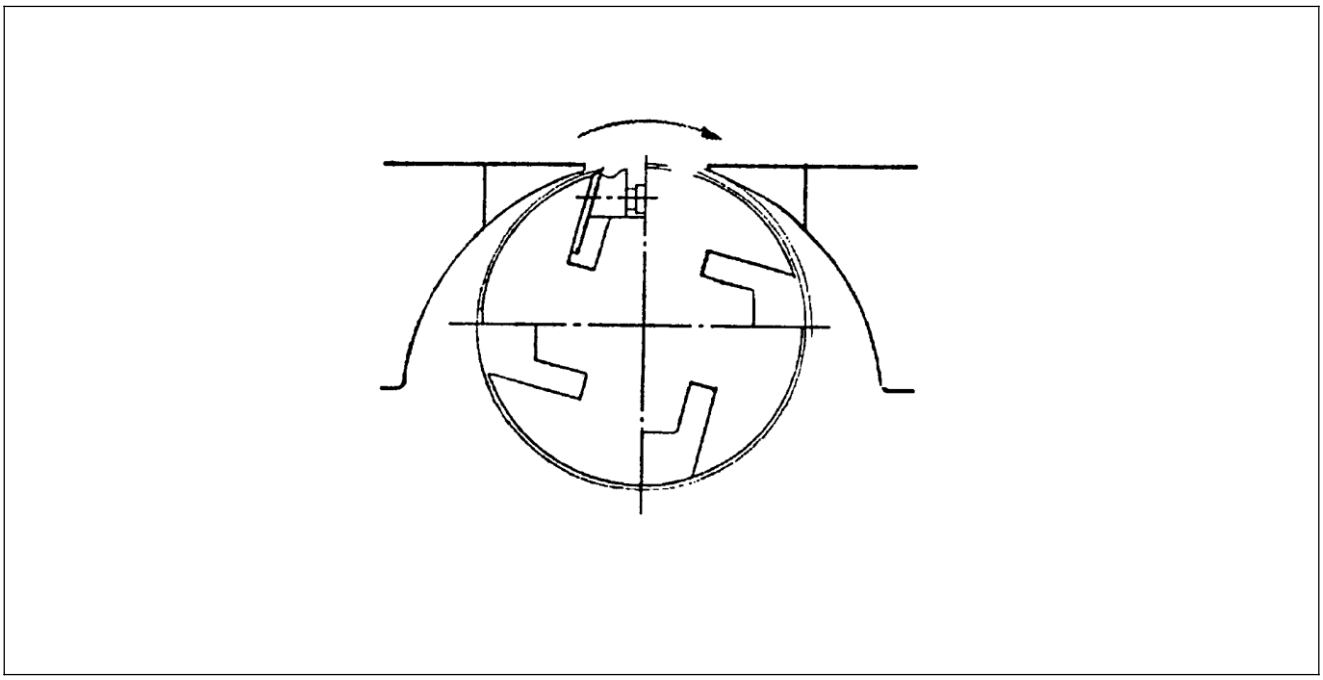

WARNING! Before connection to the mains, check that the mains voltage corresponds with the characteristics of the machine supplied.

Use a 1.5 mm2 (min.) supply cable with strengthened insulation, (e.g.HO7). If the length of the cable from the meter to the machine exceeds 10 meters, use 2.5mm2 (min) cable. The internal connections (motor, switch, coil, etc.) are factory wired.

SINGLE PHASE 230V CONNECTION: This connection should be made with a 3 core cable and a standard 16A two pole + earth plug. Two wires are provided for the supply (L1, L2) and the third (yellow/green) must be connected to the earth.

THREE PHASE 380V CONNECTION: This connection should be made with a 4 core cable and

a standard 16A three pole + earth plug. Three wires are provided for the supply (L1, L2, L3) and the fourth (yellow/green) must be connected to the earth terminal.

IMPORTANT: Three phase connection necessaries checking the correct direction of rotation of the motor shaft to avoid any problems with the belt drives.
It is essential t start the motor for the first time without a drive belt. If necessary, reverse the position of 2 of the 3 supply wires from the mains to obtain the correct rotation for the normal cutting direction.
In the event of a change to the 3 phase supply (variety of supply points, more than one socket in a basement, etc.), it is essential t repeat this check on the direction of rotation as explained above.

NOTE: For a temperature below 10 ^{0}C we recommend warning up the motor by letting it run off-load on any function.

WARNING: Before adjusting or exchanging knives and any maintenance or repairs disconnect the machine from the mains. If the operator is standing at the side of the machine against the backstop, the main cutterblock has to be rotated clockwise (consequently to the right). It is possible to change the rotation direction by exchanging (switch-over) wires (black and/or brown) for three-phase motors.

ATTENTION: The machine is injury menaces with the contrary rotation of the cutter block. Switch on the machine only for a while to find out the right direction of rotating (if possible – without tool).
The machine is also equipped with brake motor, which is able to stop the machine within required time. However, this brake motor works only when the machine is switched off by pushing red button or emergency stop cover.
When the brake does not work properly, it is forbidden to work with the machine.
The switch cannot be turned on until the machine is connected to the mains. The switch is turned off automatically by way of neutral protection with outage, it means that it is necessary to switch on the machine again after restoring of the current. Should the machine is switched off frequently in sequence (twice of threefold), check up the machine (the motor functions, the blunt tool, etc.).
The machine can be secured with a padlock placed on the switch which protects the machine from unauthorized usage.

NOTE: If the protection system is not repositioned completely, feedback circuit will restrict the motor starting.

GENERAL INFORMATION

This combination-designed machine allows the operator to perform the following operations consecutively: surface planing, thicknessing.
Surface planing: Adjustable infeed table, max. cut depth 5mm.
Thicknessing: Table height adjustable by hand wheel and button position locking – Chip discharge case for correct chip discharge – Pass limiter – Extraction nozzle – Anti-throw-out pawl.

TECHNICAL DATA

Model No	10”(C2-260S)
Planer table	1050x250mm
Thicknesser table	600x250mm
Cutterblock diameter	75mm
Cutterblock speed	4000rpm
Fence tilt	0-45°
Dust chute	100mm
Number of knives	3pcs
Max thicknessing height	180mm
Max removal thickness	3mm(Planing)/ 2.5mm(Thicknessing)
Max workpiece width	250mm

NOISE LEVELS

The manufacturer must inform the user concerning:

- the equivalent continuous sound level (Laeq), if the latter exceeds 70 dB(A) at the work station,
- the sound power level (LWA), if the Laeq exceeds 85dB(A) at the work station,
- the peak pressure level (Lpc), if it exceeds 135 dB(A) at the station,
- the measuring methods used.

REFERENCE STANDARDS: ISO 7960

- Operating conditions for noise measurements
  Annex B one-face surface planers
  Annex C one-face thicknessers
- NF S31-084 –methods for measuring sound levels in a working environment for purpose of evaluating workers’ daily level of sound exposure,
- NF S31-069 –test procedure for measuring noise emitted by machine tools.

DEFINITIONS

-Equivalent continuous sound level (LAeq) in dB(A) –the most frequently given figure
-Characterizes the receiver, gives the value received as a function of the environment, the distance from the source and/or on the basis of a test procedure for a daily exposure of 8 hours.
-sound power level (LWA) in dB(A)
-characterizes the noise source, gives an intrinsic value defining the noise emitted by this source independently of the environment.
The table below gives the following data for each work station:

- the equivalent continuous sound level based on the standard test procedures,
- the sound power level
- without load and without dust extraction,
- under load with vacuuming but without taking into account the noise of the dust extraction itself.

The nature of the premise, the location of the machine within the premises and the presence of a vacuum cleaner nearby can greatly influence the noise level. For example, for a cutting speed

of 20m/s of the thicknessing station and a dust extraction air velocity of 10 m/s instead of 20 m/s, the noise level will be reduced by about 9 dB(A).
An equivalent continuous sound level of 85 dB(A) is considered to be a danger threshold for a full-time daily exposure of 8 hours.
The threshold for 4 hours is 88 dB(A), for 2 hours 91 dB(A), for 1/2 hour 97 dB(A) and for 1/4 hour 100 dB(A). Every halving of the exposure time thus allows the danger threshold to be raised to be 3 dB(A).
Wearing noise protection headphones providing sound level attenuation of 15 dB(A) in all cases allows you to stay well below the danger threshold with no limit on exposure time.

Sound Power Level LWA According EN ISO 3744	106,2 dB(A)
Deviation	3 dB(A)
Sound Power Level LpA According EN ISO 11201	93,2 dB(A)
Deviation	3 dB(A)

EXHAUSTING SYSTEM

The machine has to be connected with exhausting appliance of sawdust during any operation. This exhausting appliance has to embody rapid current of air at least 20 meters per second. The flexible exhausting hose about the diameter of 10 millimeter will be used for connecting. The flexible exhausting hoses should be connected to the exhausting tubes, which placing is following.
Planer – the exhausting tube is placed in area of thicknessing table under the planing table – diameter 100mm.
Thicknesser – the same exhausting tube as for planing is used, but turned into upper position over the planing tables – diameter 100mm.
Liquidation of wooden waste has to be done ecologically, so that it would not worsen our environment.

THE ELETRICAL DIAGRAM

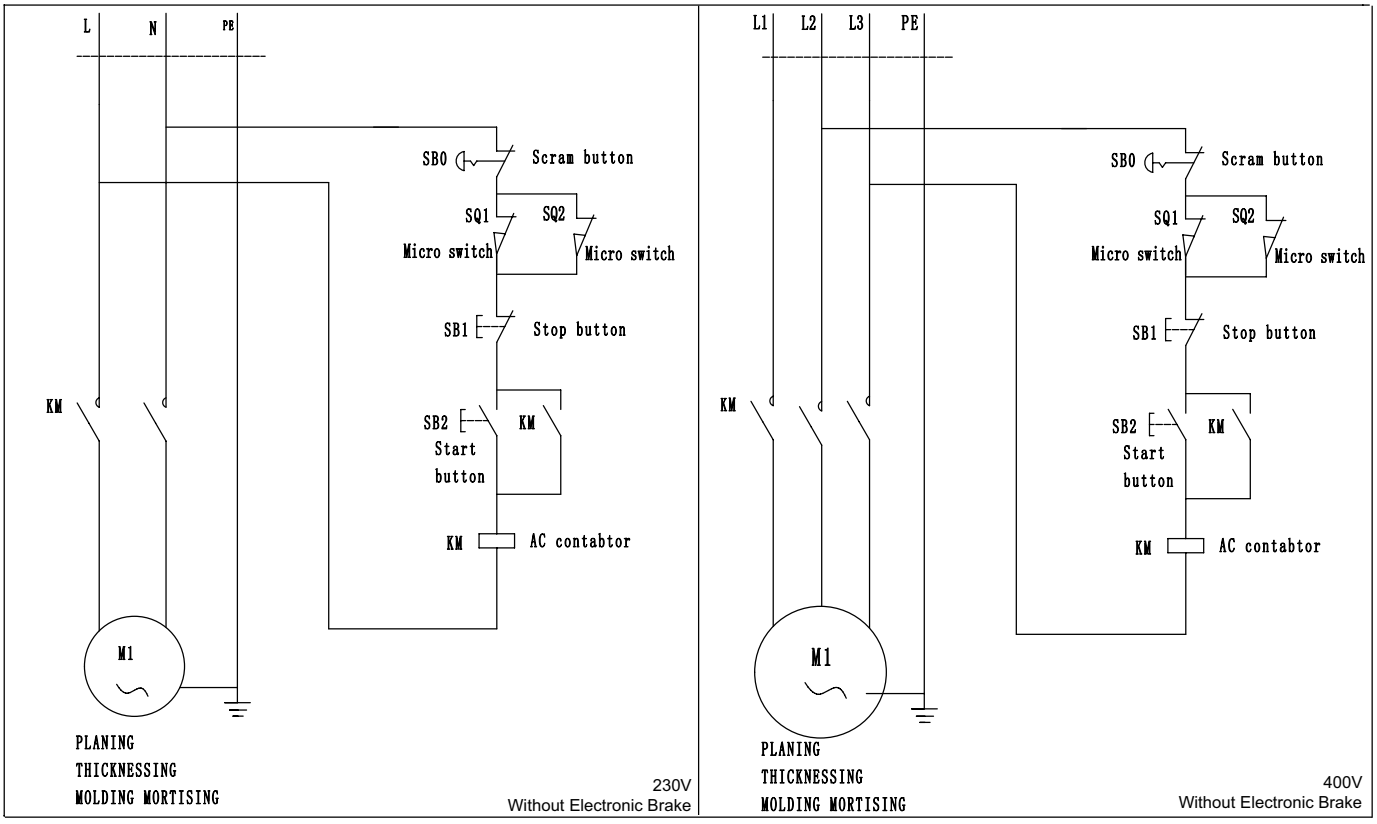

WORKING OPERATIONS

Planing of narrow workpieces

When planing narrow pieces, set the cover of the cutterblock in such a position so that the distance between the workpiece and the cutterblock cover is max 5mm. Then switch on the machine and push the material against the cutterblock (between the cutterblock cover and the rule).

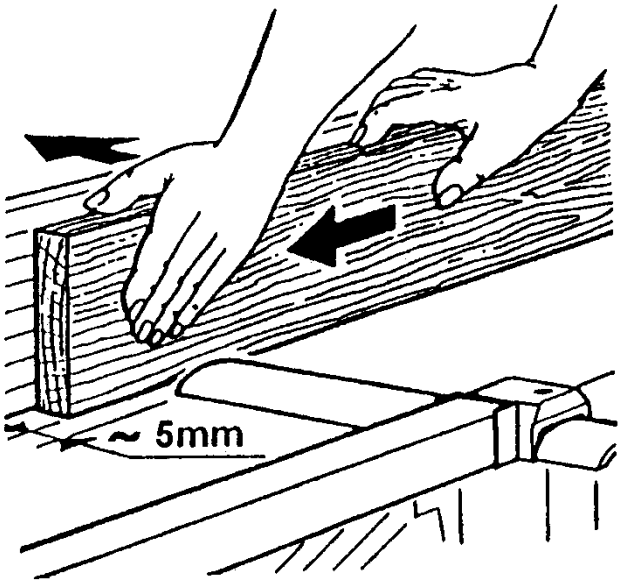

Planing with the inclined ruler

Check the angle of the longitutinal ruler when the small cranks are loosen (the position 90^0 is ensured), retighten the small cranks again and switch on the machine. Push the edge of the workpiece forward and against the rule.

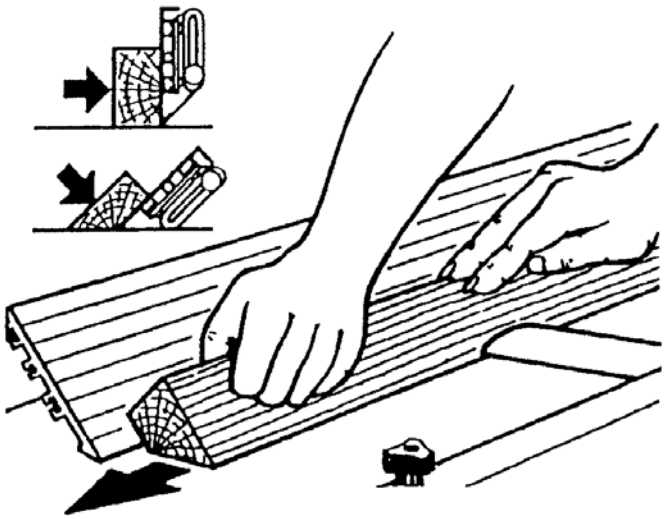

Planing of short workpieces

Use the special holder when planing short workpiece. The possible execution you can see on the picture.

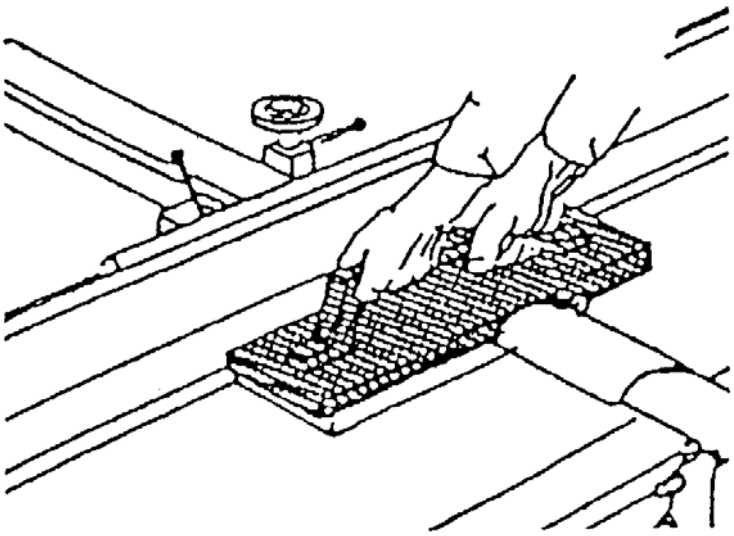

Planing of workpieces with small cross section

WARNING! There exisits danger of injury when leading the workpiece along the rule incorrectly. Use a wooden angle rule made by yourself. Affix it to the metal rule (for example by two screw clamps).

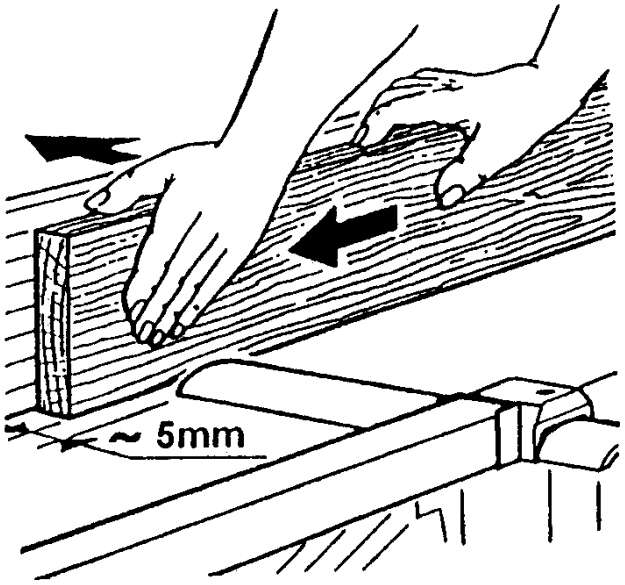

ADJUSTMENT OF THICKNESSER

These are carried out in the factory, proceed with care, as they require a high level of competence.

Thicknessing

First adjust the Planer/Thicknesser t the function of thicknessing as follows.
Swing away the safety protection.
Move the rule to the utmost position off the planing table.
Release the planing tables and swing away.
Switch on the feeding equipment by hand lever
Adjust the thickness of chip and connect the exhausting equipment.

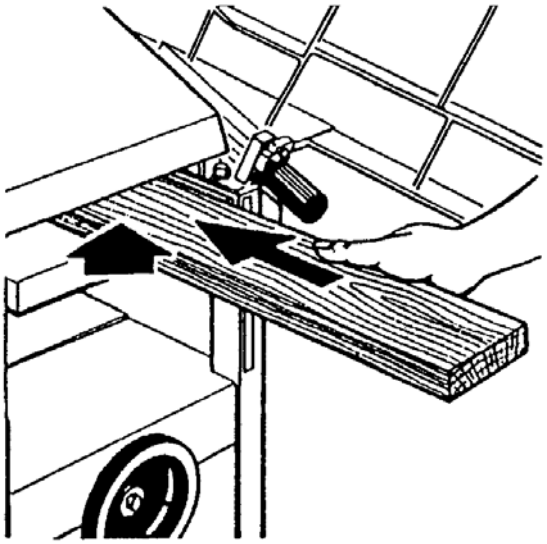

Adjustment of the table

Loosen the clamping lever of the table and adjust the thicknessing table to the required height by hand operated wheel. Put the working piece on the table, placing the un-machined side upwards. Lift the table into such a height until it stops at working piece. Using the hand-operated wheel set the stock removal (chip) at a max of 2.5mm. Then affix the table to the required position using the clamping lever. Switch on the machine and push the workpiece forwards. Workpieces with differently shaped ends have to be always inserted its wider end. When planing pitchy wood, it is recommended to coat slightly the thicknessing table with paraffin wax for easier moving.

Work area

While thicknessing stand in front of the planing table and on that side where is the hand-wheel (for lifting up the thicknessing table).

Safety instruments

When working with circular saw, spindle moulder, planer and thicknesser, the operator must wear short strengthened apron and safety goggles. It is suitable to use adequate protection of hearing and recommended working footwear. It is forbidden to use working mantle.

Workers qualification

Only authorized worker specialized in woodworking branches (or worker instructed by this specialist) is allowed to work with the machine. Operators are liable to abide with all safety instruction and regulations, which are valid in his country.

TOOLS

Recommended tools

Cutterblocks have to be marked with manufactures name or logo (marking) and max allowed rotations. Suitable tools for this machine are knives system HSS 250X30X3mm and must meet the reqirements of EN847-1.

Exchange and adjustment of knives

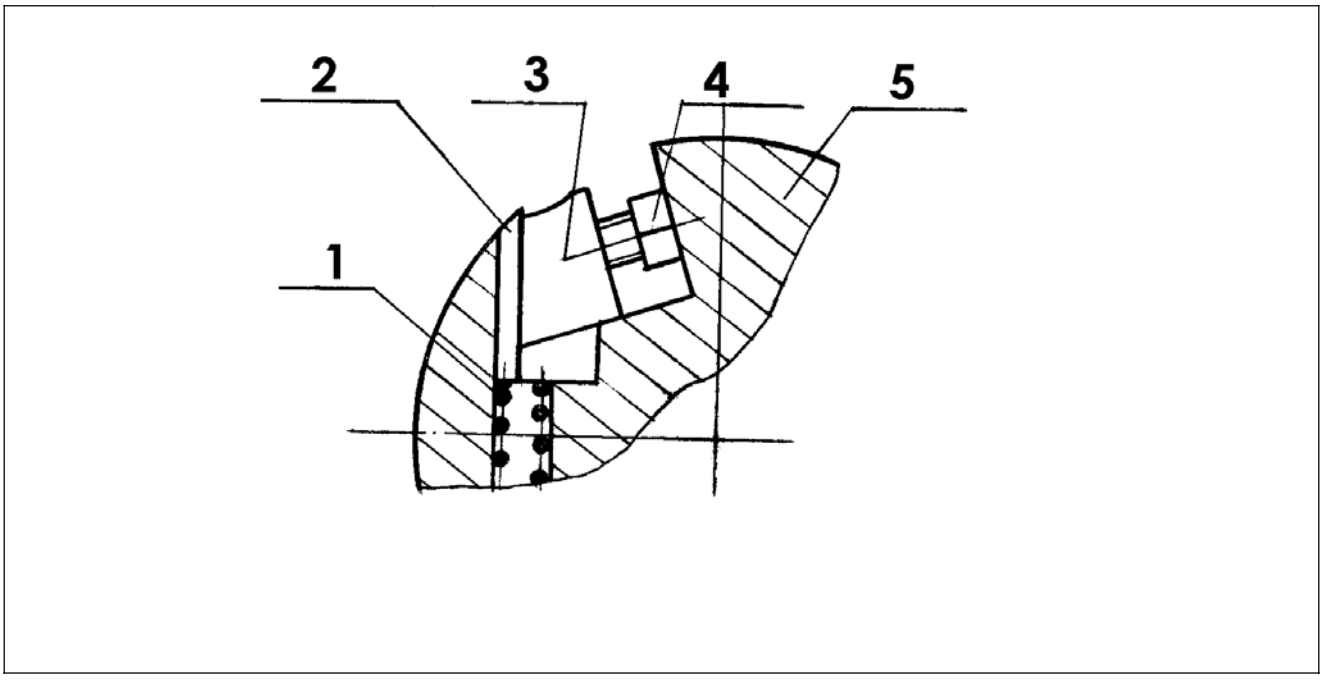

WARNING! Disconnect the machine from mains before any adjustment.
Swing away the planing tables before exchange of knives.
Release five screws (4) by spanner.
By the force of the spring (1), the knife (2) will be pushed out automatically.
Remove the knife and clean the bearing surface.

Clean the new knife carefully.
Insert the new knife by screwing five screws (4) so that its extension above the surface of cutterblock in max 1.1mm.
The manufacturer recommends the height of extension from 0.7 to 0.8mm.
Then tighten the pressing off wedge with five screws.
After all the above-mentioned steps are finished make sure to check whether all the five screws are in proper place and fix all protective covers and then try to start the machine by pushing the switch “ON” button.

WARNING! Do not use knives with width under 17mm.
Its fixing area is too small.

MAINTENANCE

WARNING! Disconnect the machine from the mains before any maintenance or repairs are carried out. Switch the machine off and lock up the main switch.

Lubrication

The machine is lubricated at the factory.
The electric motor is basically maintenance-free (sealed bearings).
The Planer/Thicknesser shafts are journalized in maintenance-free sealed bearings.
The machine should be cleaned once a week or after intensive use.
The wood feed rollers for thicknessing tend to become fouled when working with resinous woods or poplar. These and the bearing housings should be kept clean.
Table surface should be sprayed periodically with a slip enhancing or gliding product, such as Sliber-gleit or Molycote, to enhance sliding of workpieces.
The cylindrical thicknesser bed guide and the elevating rack should be cleaned and coated with a slip enhancing product.
We advise against using too greasy products which tend to amalgamate with wood dust and harden movements.

Surface planer tables

A 1 meter steel rule is required to adjust the tables.
Slightly loosen the fixing screws of the table which is out of adjustment. Tap slightly on the top or bottom of the table to obtain the correct transverse and longitudinal position, in relation to the shaft.
The possibility of adjustment is determined by the set of screw holes in the chassis (the table remains stable after each adjustment to check the geometric position in relation to the other table with the ruler.
Make sure that the gap between the tables and shaft is equal at both ends.
Tighten firmly after adjustment.

Thicknesser table

The necessary clearance between the stock and he quill (cylindrical rack system) is obtained by machining to ensure good overall rigidity and smooth handling.
Parallelism between the table work surface and the cutterblock shaft is factory-set.

REPAIRS

Any defect should not arise if you are operating the machine in the right way and making the suitable maintenance regularly. In case that the sawdust sticks on the cutterblock or the exhausting hose is filled up, switch off the electric motor before you start any repairs, otherwise it could be damaged. Also switch off the electric motor immediately, if the workpiece is getting jammed.

Exchange them immediately in such a case. If the machine embodies increase vibrations, check its placing, fixing or balance of tools.

The machine do not work.
Check the electrical installation and connection to the mains.

The thicknessing table moves only with difficulties.
Loosen the clamping lever of the table.

The output of the machine is insufficient.
Knives are blunt.
Too thick chip is adjusted and the operator has to adjust it according to the width and hardness of the wood.
The thicknessing table is not clean.
The V-belt of the cutterblock is not tightened well.
The electric motor has no sufficient output, it is necessary to call qualified electricians.

The machine vibrates
Knives are blunt or incorrectly adjusted.
Knives have no the same width.
The machine was installed on uneven surface.

Thicknessing is not possible on the machine
Too thick chip was adjusted.
The thicknessing table is not clean.

The working piece slaps against the back table.
Incorrectly adjustment of knives or back table.

Projection at the end to the workpiece.
Uneven surface for planing.
Incorrectly adjusted knives or tables.
Incorrect pushing or leading of the working piece while planing.

EXPLODED DRAWING FOR C2-260S

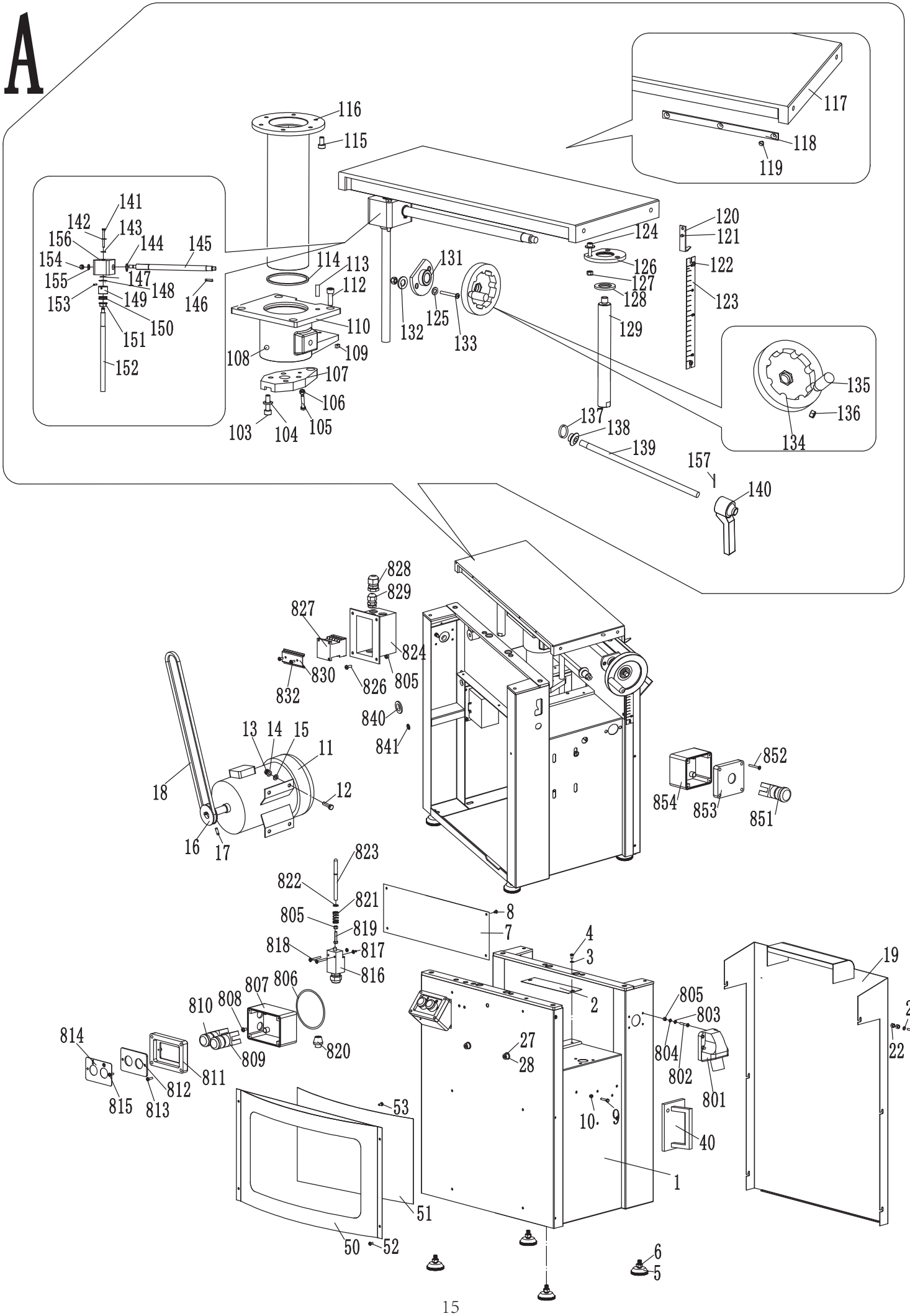

B

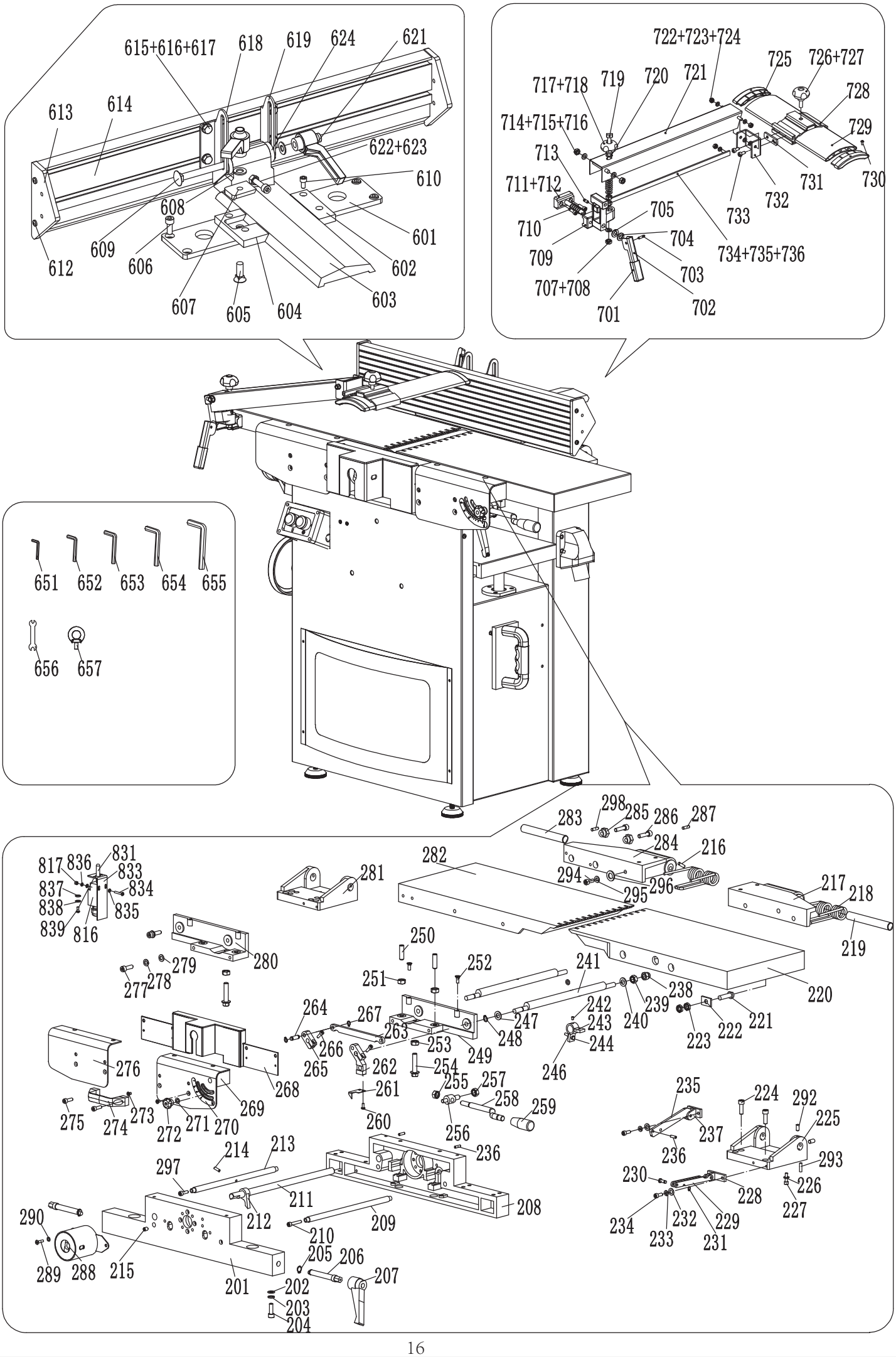

615+616+617
618
619
624
621
613
614
622+623
610
608
601
609
606
602
612
607
605
604
603
722+723+724
725
726+727
717+718
719
720
721
728
714+715+716
729
713
731
730
711+712
732
733
705
710
704
709
734+735+736
703
707+708
702
701
651
652
653
654
655
656
657
298
285
286
287
283
284
216
282
294
296
295
217
218
219
281
817
836
831
833
837
834
838
835
839
816
280
279
278
277
250
252
241
251
238
220
264
267
263
247
242
239
240
221
243
222
223
266
253
248
244
265
262
249
254
246
276
268
255
257
261
258
259
275
274
273
272
271
270
269
260
256
235
224
292
225
237
236
214
213
236
293
297
230
226
211
228
227
290
212
209
208
234
232
229
233
231
210
289
288
215
205
206
207
201
202
203
204

C

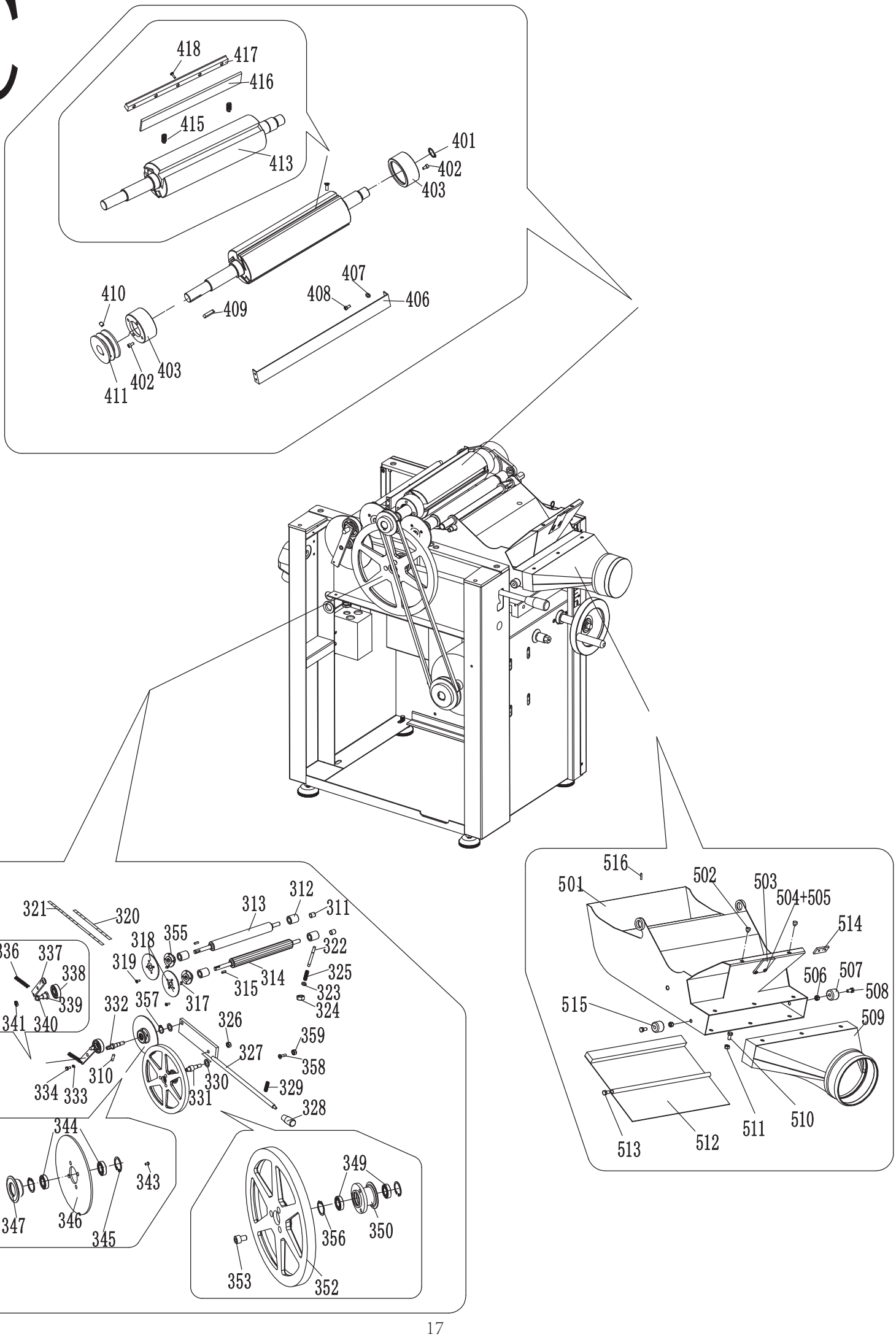

418
417
416
415
413
401
402
403
407
408
406
410
409
403
402
411
516
501
502
503
504+505
514
506
507
508
515
509
510
511
512
513
321
320
313
312
311
318
355
322
336
337
338
319
314
325
339
315
323
317
324
332
357
341
340
326
359
327
358
310
330
329
334
333
331
328
344
349
343
347
346
345
356
350
353
352

SPARE PARTS LIST FOR C2-260S

NO.	PARTS	QTY	NO.	PARTS	QTY
1	BED	1	110	GUIDE PLATE	1
2	COVER PLATE	2	112	SCREW	4
3	FLAT WASHER	9	113	SET SCREW	4
4	SCREW	4	114	SEAL	1
5	FEET	4	115	SCREW	6
6	NUT	8	116	LIFTING TUBE	1
7	RIGHT INNER COVER	1	117	THICKNESSING TABLE	1
8	SCREW	5	118	APRON	4
9	SCREW	1	119	SCREW	12
10	NUT	1	120	POINTER	1
11	MOTOR	1	121	SCREW	2
12	BOLT	4	122	SCREW	2
13	NUT	4	123	RULER	1
14	SPRING WASHER	4	124	BOLT	3
15	BIG FLAT WASHER	8	125	FLAT WASHER	2
16	DRIVING SHEEL	1	126	BLOCK	1
17	SET SCREW	1	127	LOCK NUT	5
18	V-BELT SPZ	1	128	WASHER	1
19	COVER	1	129	MANDRIL	1
20	SCREW	2	131	BLOCK	1
21	FLAT WASHER	2	132	BIG FLAT WASHER	2
22	LOCK NUT	1	133	HEXAGON BOLT	2
27	SCREW	1	134	HANDWHEEL BODY	1
28	FLAT WASHER	5	135	HANDWHEEL SHANK	1
40	PRESS BAR	1	136	CAP NUT	1
50	DECORATION PLATE	1	137	SHAFT CIRCLIP	1
51	DECORATION PLATE FRAME	1	138	SUPPORTING SLEEVE	1
52	SCREW	4	139	LOCK LEVER	1
53	SCREW	6	140	HANDLE	1
103	SCREW	4	141	BOLT	2
104	SPRING WASHER	4	142	SPRING WASHER	2
105	SCREW	1	143	FLAT WASHER	2
106	NUT	1	144	SHAFT CIRCLIP	1
107	LAYER PLATE	1	145	GEAR SHAFT	1
108	OIL CUP	1	146	FLAT KEY	1
109	LOCKING BLOCK	1	147	SHAFT CIRCLIP	1

NO.	PARTS	QTY	NO.	PARTS	QTY
148	FLAT WASHER	2	231	SPLIT WASHER	3
149	SPIRAL GEAR	1	232	FLAT WASHER	4
150	THRUST BEARING	1	233	SPRING WASHER	4
151	BUSH	1	234	SCREW	4
152	SCREW ROD	1	235	ROD II	1
153	PIN	1	236	SPRING PIN	3
154	LOCK NUT	2	237	BRACKET II	1
155	FLAT WASHER	1	238	NUT	2
156	GEAR BOX	1	239	NUT	2
157	PIN	2	240	FLAT WASHER	2
201	RIGHT BRACKET	1	241	ECCENTRIC SHAFT	2
202	FLAT WASHER	8	242	SCREW	1
203	SPRING WASHER	8	243	LIMITED BLOCK	1
204	SCREW	8	244	BOLT	2
205	SHAFT CIRCLIP	2	246	NUT	2
206	ECCENTRIC ROD	2	247	FLAT WASHER	2
207	HANDLE	2	248	SHAFT CIRCLIP	2
208	LEFT BRACKET	1	249	REAR SUPPORTING PL	1
209	SUPPORTING AXLE	1	250	SET SCREW	4
210	SCREW	3	251	NUT	4
211	SPINDLE	1	252	SCREW	4
212	PENDULUM	20	253	NUT	2
213	LIMIT SPINDLE	1	254	BOLT	2
214	PIN	1	255	NUT	1
215	SET SCREW	8	256	LOCKING SUPPORT BA	1
216	SET SCREW	2	257	NUT	1
217	BACKWARD SHIFTING BASE	1	258	HANDLE LEVER	1
218	TORSIONAL SPRING	2	259	HANDLE SHANK	1
219	BACKWARD SHIFTING SPINDLE	1	260	SCREW	2
220	PLANING TABLE	1	261	POINTER	1
221	BOLT	1	262	DRIVING CONNECTIN(	1
222	GASKET	1	263	CONNECTING ROD	1
223	NUT	1	264	PIN	2
224	SCREW	8	265	DRIVEN CONNECTING	1
225	REAR SUPPORTING BASE	1	266	SCREW	2
226	NUT	2	267	SHAFT CIRCLIP	4
227	STOP SCREW	2	268	CENTER GUARD	1
228	BRACKET I	1	269	REAR GUARD	1
229	ROD I	2	270	SCALEPLATE	1
230	PIN ROLL	3			

NO.	PARTS	QTY	NO.	PARTS	QTY
271	WAHER	1	326	NUT	2
272	ADJUSTING HANDLE	1	327	CONNECTING PLATE	1
273	SCREW	4	328	HAND SHANK	1
274	SQUARE HANDLE	2	329	SPRING	1
275	SCREW	4	330	FLAT WASHER	2
276	FRONT GUARD	1	331	AXIS PIN	1
277	SCREW	2	332	AXIS PIN	1
278	SPRING WASHER	2	333	WAHER	1
279	FLAT WASHER	2	334	BOLT	1
280	FRONT SUPPORTING PLATE	1	336	TENSION SRPING	1
281	FRONT SUPPORTING BASE	1	337	TENSION PLATE	1
282	FRONT WORKING TABLE	1	338	DEEP GROOVE BALL BI	1
283	FFONT SPINDLE	1	339	PIN	1
284	FRONT SHIFTING BASE	1	340	FLAT WASHER	1
285	ECCENTRIC BUSH	2	341	NUT	1
286	SCREW	2	343	SCREW	4
287	PIN	1	344	DEEP GROOVE BALL BI	2
288	CHUCK COVER	1	345	HOLE CIRCLIP	2
289	SCREW	2	346	CHAIN WHEEL	1
290	FLAT WASHER	2	347	CHAIN WHEEL II	1
292	SET SCREW	4	349	DEEP GROOVE BALL BI	2
293	SET SCREW	2	350	CHAIN WHEEL III	1
294	SCREW	1	352	FRICTION WHEEL	1
295	SPING WASHER	1	353	SCREW	3
296	FLAT WASHER	1	355	CHAIN WHEEL BODY	2
297	SCREW	1	356	CIRCLIP	2
298	ROUND IN	1	357	CIRCLIP	2
310	SET SCREW	1	358	SCREW	1
311	WRAPPED BUSH	8	359	NUT	1
312	OUTER BUSH	4	401	CIRCLIP	1
313	PRESSING ROLL	1	402	SCREW	8
314	DRIVING ROLL	1	403	BEARING BASE ASSEM	2
315	FLAT KEY	2	406	PROTECTIVE PLATE	1
317	SET SCREW	2	407	SPRING WASHER	4
318	CHAIN WHEEL IV	2	408	SCREW	4
319	SCREW	8	409	FLAT KEY	1
320	CHAIN	1	410	SET SCREW	1
321	CHAIN	1	411	DRIVEN WHEEL	1
322	BOLT	4	413	CUTTER BLOCK	1
323	FLAT WASHER	4	415	PRESSURE SPRING	6
324	LOCK NUT	4	416	BLADE	3
325	SPRING	4	417	WEDGE BLOCK	3
			418	SCREW	15

NO.	PARTS	QTY
501	DUST CHUTE	1
502	PAD	2
503	LOCKING PLATE	1
504	BOLT	2
505	LOCK NUT	2
506	LOCK NUT	2
507	SUPPORT RUBBER CYLINDER	1
508	SCREW	2
509	DUST CHUTE HEAD	1
510	BOLT	6
511	LOCK NUT	6
512	CHANGE-OVER PLATE	1
513	SCREW	2
514	PRESS BOARD	1
515	RUBBER SUPPORT	1
516	PIN	2
520	REDUCTION SLEEVE	1
521	STEEL CLAP	1
601	CONNECTING BOARD	1
602	RIGHT FIXING PLATE	1
603	GUIDE BOARD	1
604	LEFT FIXING PLATE	1
605	SCREW	1
606	SCREW	4
607	PRESS BOARD	1
608	FLAT WASHER	2
609	SCREW	1
610	SCREW	4
612	SCREW	4
613	PLASTIC INSERT	2
614	FENCE BODY	1
615	NUT	4
616	FLAT WASHER	4
617	BOLT	4
618	LEFT SLIDING PLATE	1
619	RIGHT SLIDING PLATE	1
621	HANDLE	2
622	SCREW	1
623	NUT	1
624	WASHER	2

NO.	PARTS	QTY
651	HEX WRENCH	1
652	HEX WRENCH	1
653	HEX WRENCH	1
654	HEX WRENCH	1
655	HEX WRENCH	1
656	SOLID WRENCH	1
657	BOLT	2
701	RUBBR SLEEVE	1
702	LOCKING HANDLE	1
703	PIN	1
704	SPRING WASHER	1
705	FLAT WASHER	2
707	NUT	3
708	FLAT WASHER	4
709	ROTATION BLOCK	1
710	SCREW	2
711	FIXING BLOCK	1
712	SPRING	1
713	PIN	1
714	SCREW ROD	1
715	NUT	2
716	FLAT WASHER	4
717	ADJUSTING HANDLE	1
718	SPRING	1
719	ADJUSTING BOLT	1
720	FLAT WASHER	1
721	BEARING FRAME	1
722	SCREW ROD M6	1
723	LOCKING NUT	2
724	FLAT WASHER	2
725	PLASTIC INSERT	2
726	LOCKING HANDLE	1
727	PROTECTIVE PLATE	1
728	PROTECTIVE PLATE CC	1
729	METAL TUBE	1
730	SCREW	2
731	FIXING PLATE	1
732	ADJUSTING FRAME	1
733	SCREW	2
734	CONNECTING ROD	1
735	FLAT WASHER	1
736	LOCKING NUT	1

NO.	PARTS	QTY	NO.	PARTS	QTY
801	PLUG	1	823	MANDRIL	1
802	SCREW	4	824	A.C. CONTACTOR BOX	1
803	SPRING WSHER	4	826	SCREW	4
804	FLAT WASHER	4	827	A.C. CONTACTOR	1
805	NUT	9	828	CABLE STRAIN RELIEVE	3
806	SEAL	1	829	CABLE STRAIN RELIEVE	2
807	SWITCH BOX UNDER COVER	1	830	STEEL GUIDE RAIL	1
808	SCREW	4	831	MANDRIL	1
809	PRESS BUTTON	1	832	SCREW	2
810	PRESS BUTTON	1	833	FIXING BOARD	1
811	SWITCH BOX UP COVER	1	834	SCREW	2
812	SWITCH BOARD	1	835	FLAT WASHER	6
813	SCREW	4	836	SPRING WSHER	4
814	SWITCH PLATE	1	837	FLAT WASHER	2
815	SCREW	2	838	SPRING WSHER	2
816	MICRO-SWITCH	2	839	SCREW	2
817	NUT	4	840	WIRE SLEEVE	2
818	SCREW	2	841	WIRE SLEEVE	2
819	BOLT	1	851	PRESS BUTTON	1
820	CABLE STRAIN RELIEVER	3	852	SCREW	4
821	SPRING	1	853	EMERGENCY SWITCH I	1
822	SPLIT WASHER	1	854	EMERGENCY SWITCH I	1